SHOP NOTE:
1) STRINGERS: C12x20.7
2) RAILING 1¼Φ SCHED 40 PIPE (1.66" O.D.)
3) POST 1¼Φ SCHED 80 PIPE (1.66" O.D.)
4) PICKETS ¾Φ SCHED 40 PIPE
5) WALL RAIL: WAGNER #1100-1 RETURN TYP. AT END.
6) BRACKETS: WAGNER #3418
7) FOR T & R DETAIL SEE ST-10
8) HANDRAIL: ALL DIMENSIONS ARE TO CENTER LINE OF PIPES
9) FOR TYP. RAIL DETAIL SEE ST-11

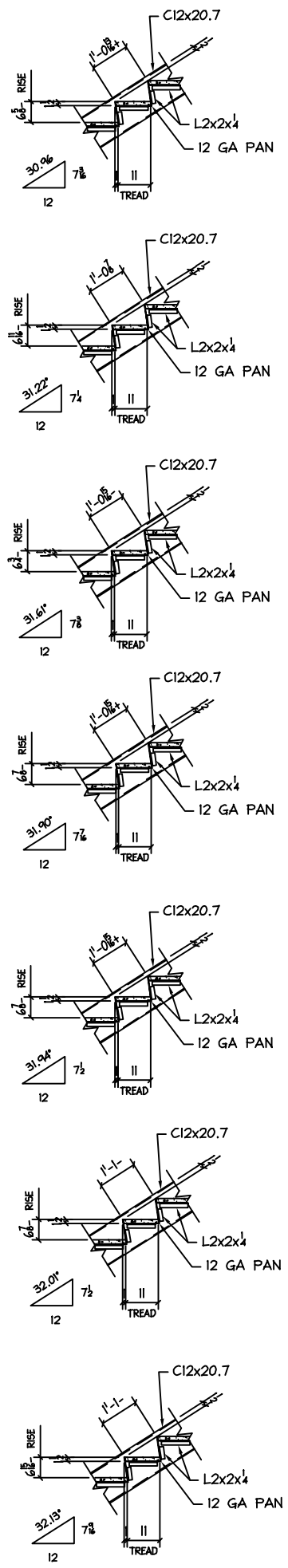

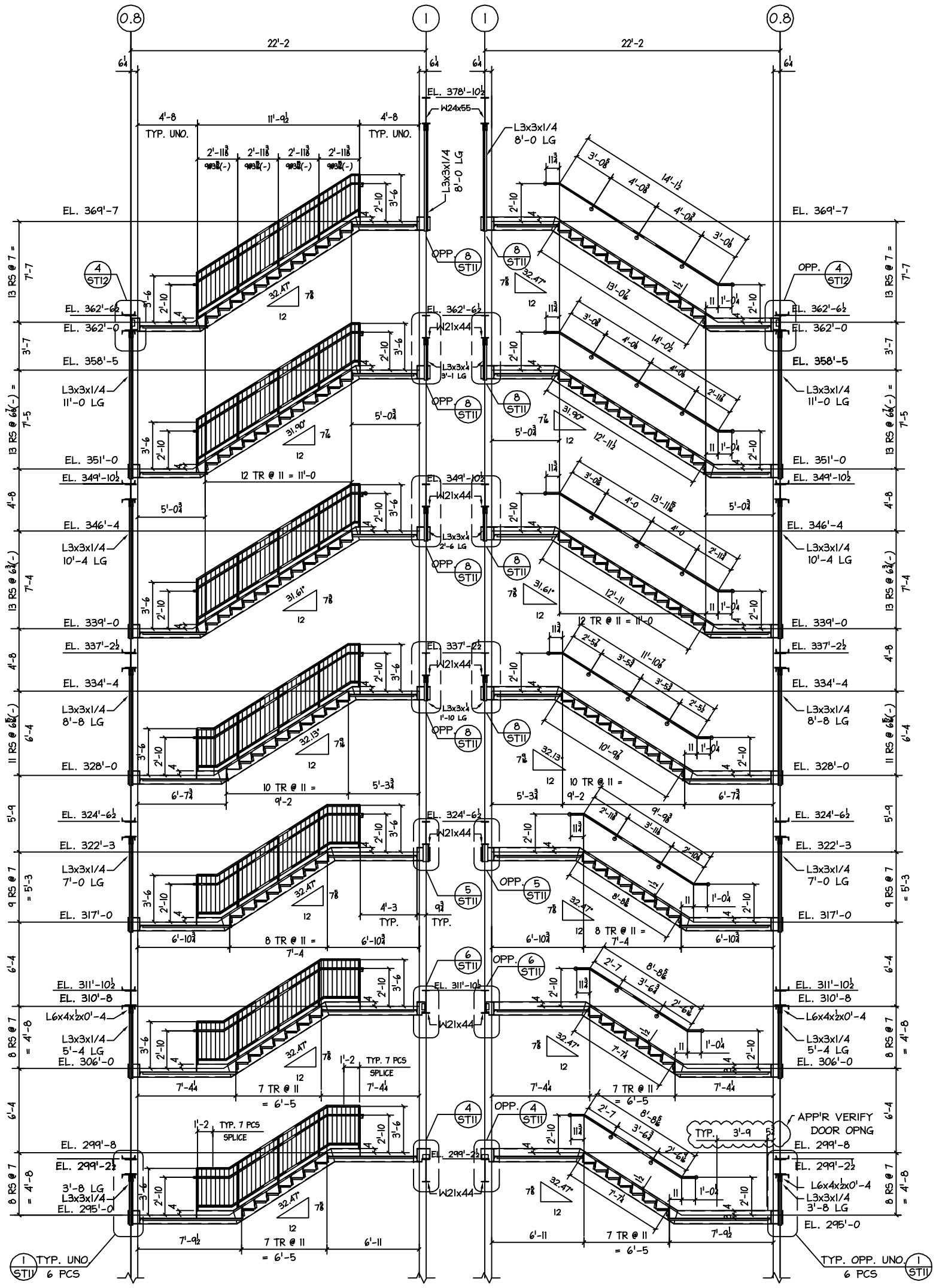

STAIR #1 SECTION
SCALE ¼" = 1'-0
SEE ST-13 FOR WALKING PATH OPENING DETAIL

STAIR #1 SECTION
SCALE ¼" = 1'-0
SEE ST-13 FOR WALKING PATH OPENING DETAIL

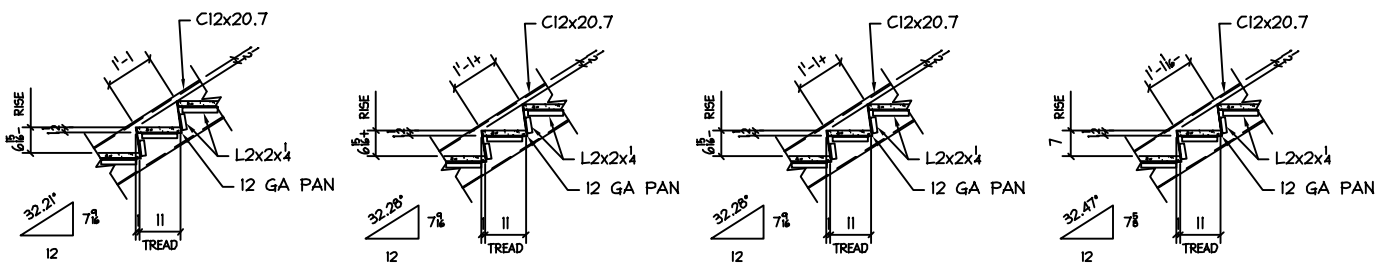

TREAD & RISER DETAILS

PDF created with pdfFactory Pro trial version www.pdffactory.com