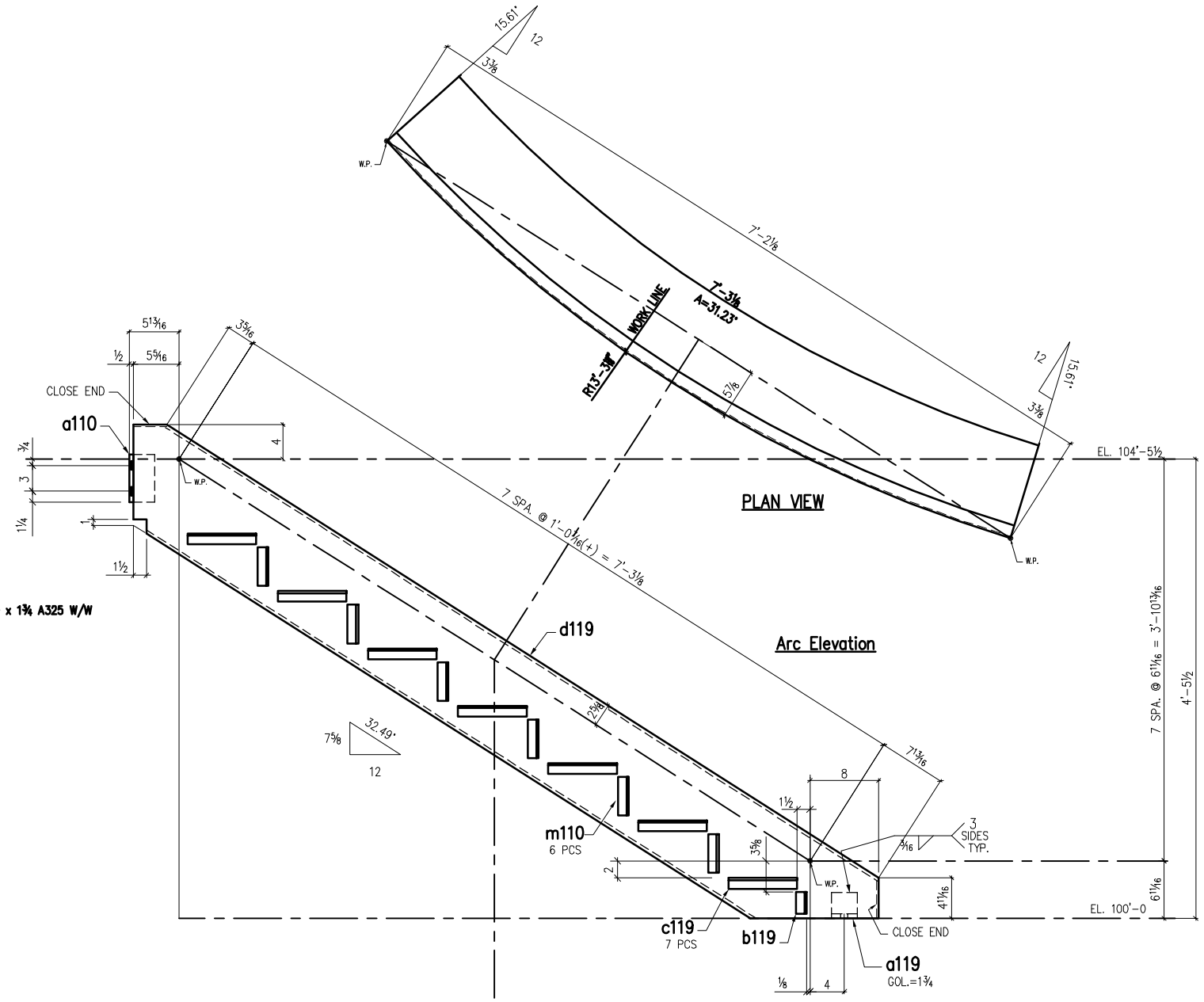

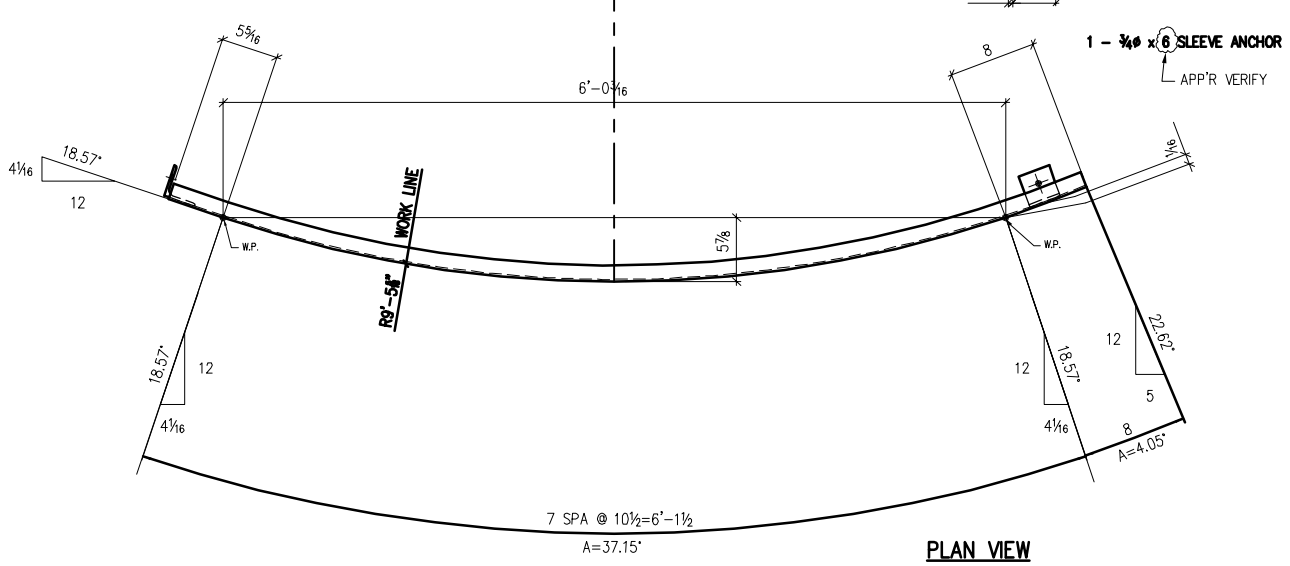

ONE – STRINGER – 119A

3 VIEWS SHOWN

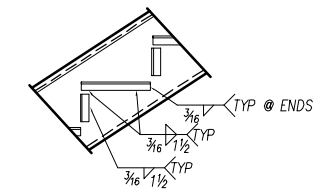

TYPICAL PAN WELDING AT ANGLE SUPPORTS

SHOP BILL

NO.	DESCRIPTION	FT	IN	ASSEM. MARK	SHIPPING MARK	REMARKS	WEIGHT
ONE	STRINGER				119A		
1	L3x3x¼	0	5½	a110			
6	L1¼x1¼x¼	0	4½	m110			
1	L3x3x¼	0	3	a119			
1	L1¼x1¼x¼	0	2½	b119			
7	L1¼x1¼x¼	0	8	c119		ROLLED	
1	MC12x10.6	13	0	d119		ROLLED,9' USEABLE	
	FIELD BOLTS						
1	¾ø SLEEVE ANCHOR	0	6				
2	¾ø A325 W/W & N	0	1¾				

MATERIAL UNO. :
W.F. SHAPES = A572 GR 50
ANGLES,RODS,CHANNELS,PLATES,BARS = A36
TUBE = A500 GR B
PIPE = A501 GRB

REV.	DATE	DESCRIPTION	MADE BY

PRINT RECORD

APRVL	SHOP	FIELD

HOLES: $\frac{13}{16}$ø Holes
PAINT: 1.5 Mils STD Gray Primer
CLEANING:
REF. DRAWINGS:

DWN. BY
CHK'D BY
SHT. NO.
JOB NO.

PDF created with pdfFactory Pro trial version www.pdffactory.com